Input

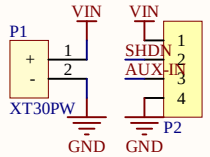

Output

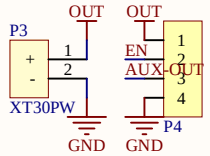

Surge Stopper

V-clamp=1.25V*(120kΩ+5kΩ)/5kΩ=31.25V

V-low=1.25V*(499kΩ+30kΩ)/30kΩ=22.04V

I-clamp=50mA/20mΩ=2.5A

T-warning=100nF*0.1V/5uA=2ms

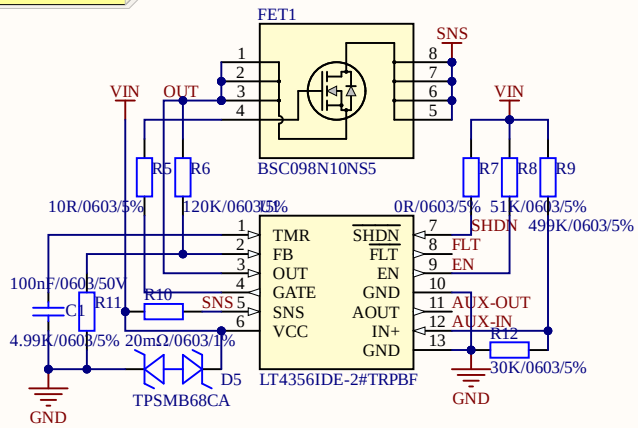

Indicate

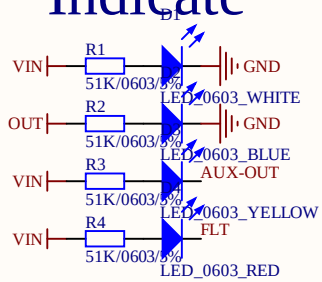

Fix

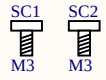

Title	HWSD-PSM Series-SurgeSafe		
Size A4	Number	Revision	V1.0
Date:	2/13/2022	Sheet of	
File:	C:\Users\..\HWSD-SurgeSafe SCH.SchDoc	Drawn By:	ASR-Crash